INDEX

INSTALLATION PROCEDURE FOR UWS MBS WELLHEAD ASSEMBLY

Mewbourne Oil Company	Operator name
13-5/8 5M x 13-3/8 STC	Size
Standard	Service (type)
	Area name and OCS block number
	Well name and API number
20 x 13-3/8 x 9-5/8 x 7	Casing program
June 27, 2019	Today's date
Brent Cormier	Contact Person
MBS-000130-RP	Manual Identification Number

Revision Log

Revision	Details
A	Initial Release

LIST OF ILLUSTRATIONS

ENGINEERING

Approval Log

Approved By: Bob Allen
SIGNATURE
Bob Allen
PRINT NAME

Revision	REVIEWER NAME	REVIEWER TITLE	DATE
A	Jason Guillemette, P.E.	Engineering Manager	

Please ensure the latest revision is in use.

1.0 Stackup Layout

EQUIPMENT

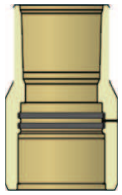

7" MANDREL CASING HANGER R&R TOOL
UWS-D061-02

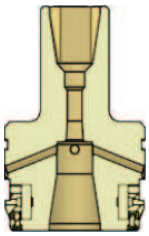

COMBINATION TEST / WEAR BUSHING R&R TOOL
UWS-D054-01

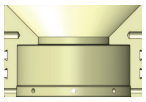

7" BIT GUIDE
UWS-D100-01

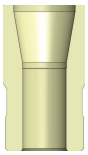

7" PACK-OFF R&R TOOL
UWS-D179-01

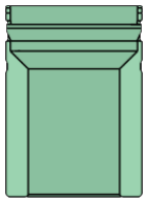

13-5/8" SHORT WEAR BUSHING
UWS-D026-01

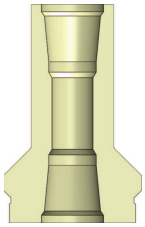

9-5/8" PACK-OFF SUPPORT BUSHING R&R TOOL
UWS-D006-01

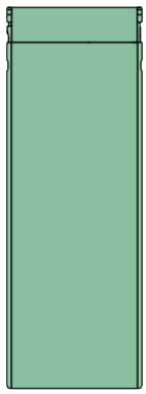

13-5/8" LONG WEAR BUSHING
UWS-D025-01

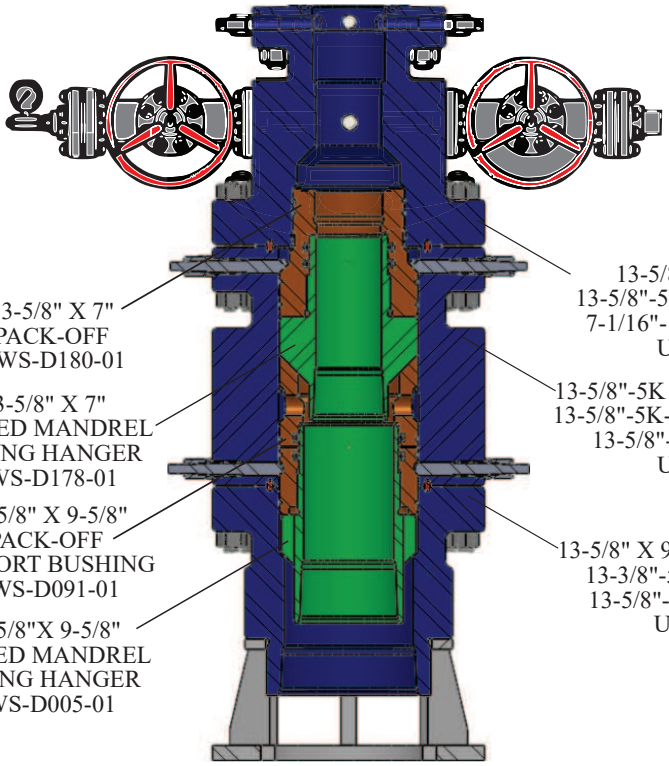

13-5/8" X 7" PACK-OFF
UWS-D180-01

13-5/8" X 7" FLUTED MANDREL CASING HANGER
UWS-D178-01

13-5/8" X 9-5/8" PACK-OFF SUPPORT BUSHING
UWS-D091-01

13-5/8"X 9-5/8" FLUTED MANDREL CASING HANGER
UWS-D005-01

13-5/8" - 10K TBG HD
13-5/8"-5K-BX 160 FLG DWN
7-1/16"-10K-BX156 FLG UP
UWS-D174-01

13-5/8"-5K MULTI-BOWL SPOOL
13-5/8"-5K-BX160 STD FLG DWN
13-5/8"-5K-BX160 FLG UP
UWS-D092-01

13-5/8" X 9-5/8" - 5K CSG HEAD
13-3/8"-5K-STC BOX DWN
13-5/8"-5K-BX160 FLG UP
UWS-D176-01

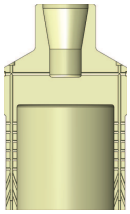

WASH TOOL
UWS-D083-01

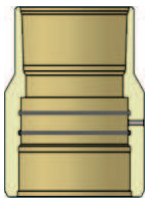

9-5/8" MANDREL CASING HANGER R&R TOOL
UWS-D003-01

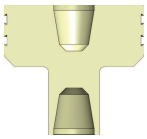

13-5/8" UPPER TEST PLUG
UWS-D185-01

RIGHT SIDE VIEW W/ TUBING HEAD

NOM. 13-5/8" 5M X 13-5/8" 5M

2.0 Installation of Primary Equipment

Equipment List			
Item No.	*Description*	*Part Number*	*Qty.*
1	MULTIBOWL ASSEMBLY CONSISTS OF LOWER & UPPER MULTIBOWL ASSEMBLIES AS SHOWN BELOW		1
1A	LOWER HEAD ASSEMBLY, 13 3/8"-5K-STC BOX BTM X 13 5/8"-5K FLG TOP	UWS-D176-01	1
1B	UPPER MULTIBOWL ASSEMBLY, 13 5/8"-5K-STD FLG BTM X 13 5/8"-5K-FLG TOP	UWS-D092-01	1

Recommended Spares			
Item No.	*Description*	*Part Number*	*Qty.*
1	13-1/2" O.D. S-SEAL, .340 LG, 80 HNBR	S13.500X.340HNBR	5

2.0 Preparation Checklist

☐ **1.** Record Multibowl Assembly Part and Serial Number. Check parts.

☐ **2.** Inspect Multibowl's upper and lower bowl. Ensure that seal areas are in good condition and free from any damage.

☐ **3.** Inspect ring groove for burrs and damage. Should there be any burrs present, redress using emery cloth.

☐ **4.** Ensure 8rd pin is in good condition.

2.1 Installation of Multibowl Assembly

☐ **1.** Examine the 13-3/8" collar thds.

☐ **2.** Apply pipe dope per customer spec.

☐ **3.** Pick up Multibowl with a certified wire rope harness and position over the collar.

Ensure the Multibowl is level and outlet orientation will match the flow lines.

NOTE: The Multibowl approximate weight is: **1.75 tons**

☐ **4.** Make up the threeads to Customer specs.

NOTE: only tong on the casing extension.

☐ **5.** Pick up the casing and Multibowl and remove floor slips. Lower the assembly through the rig floor and position on the conductor.

☐ **6.** Ensure the base plate contacts. the top of the conductor pipe.

☐ **7.** Slack off weight and remove the, landing joint.

–

☐ **8.** Remove outlet plugs.

☐ **9.** Install outlet valves as required.

2.2 Multi-Bowl Assembly Stack-Up

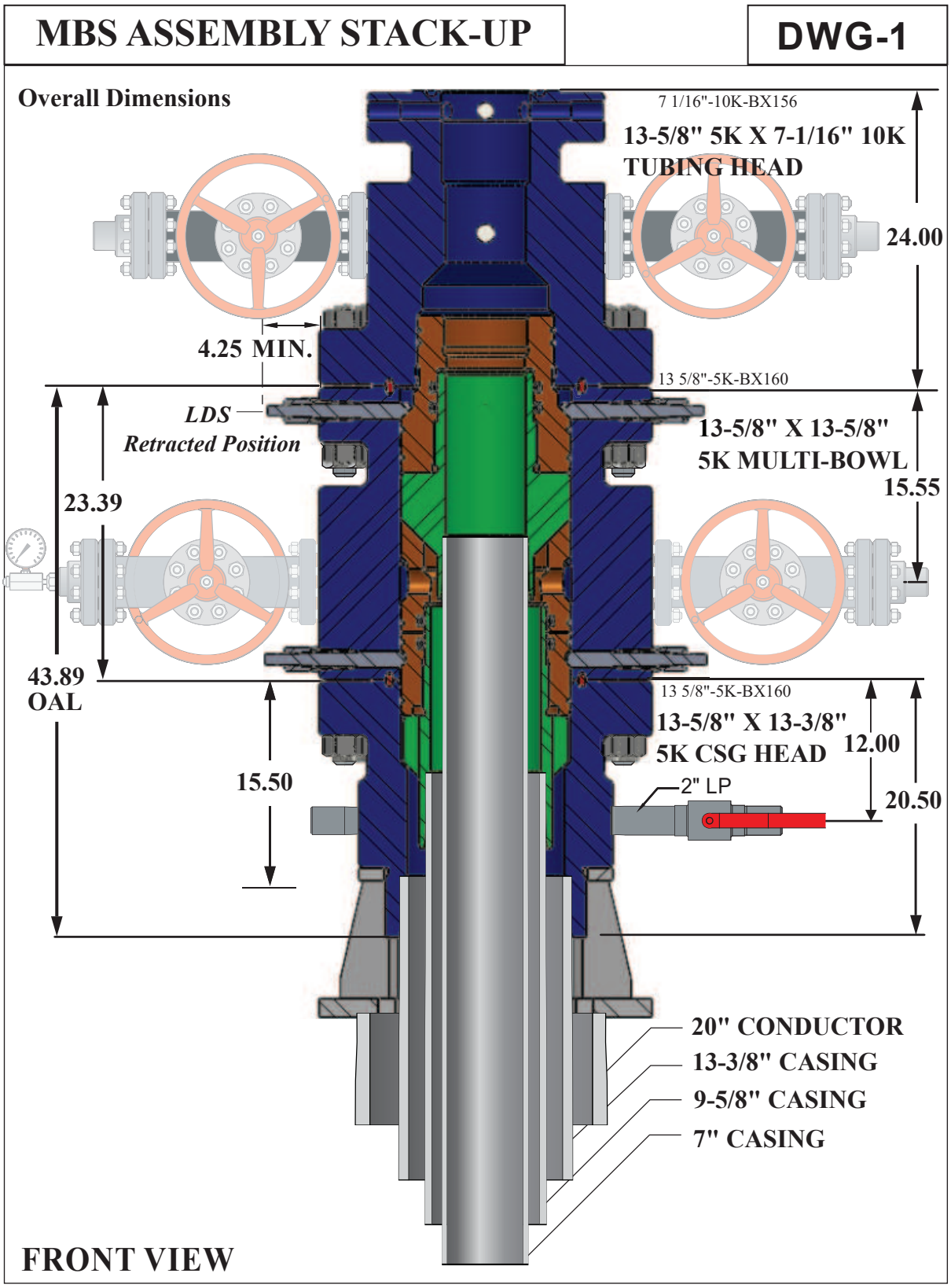

MBS ASSEMBLY STACK-UP

DWG-2

Test Port
Details

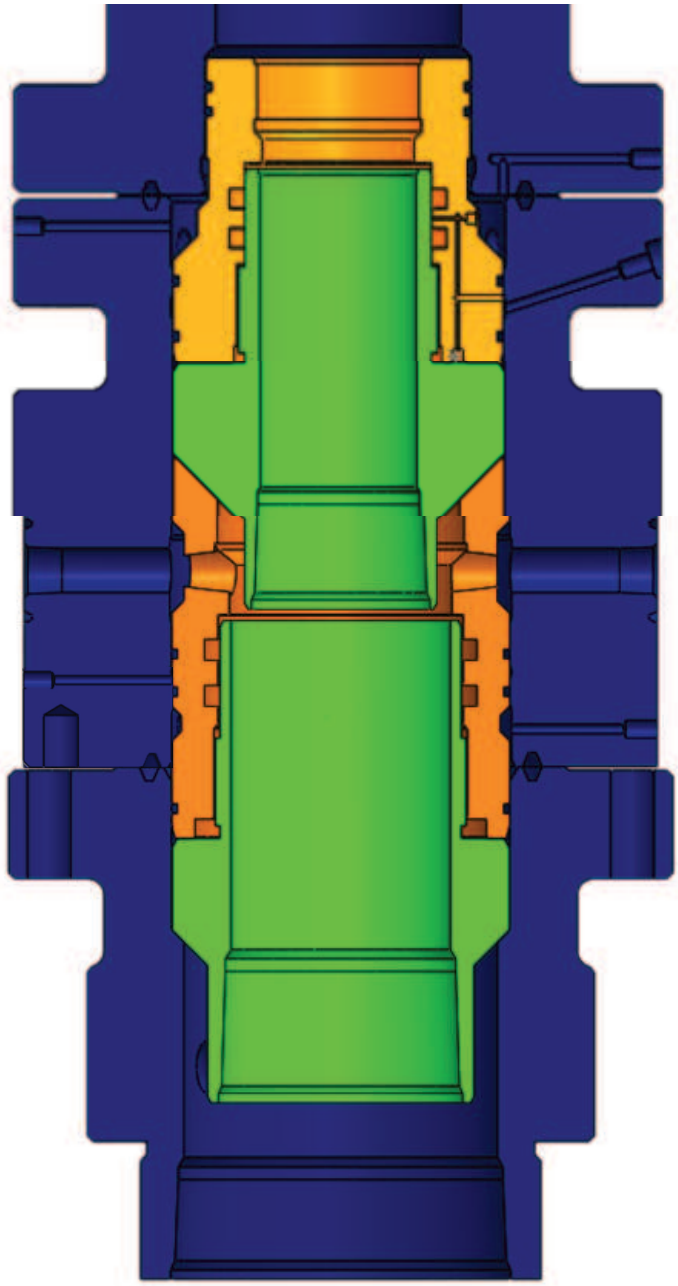

TEST PORTS

2.3 Running and Retrieving Combination BOP Test Plug / RRT o ol

Equipment List			
Item No.	*Description*	*Part Number*	*Qty.*
1	COMBINATION TEST PLUG/WEAR BUSHING R&R TOOL	UWS-D054-01	1

Recommended Spares			
Item No.	*Description*	*Part Number*	*Qty.*
1	13-5/8" D-SEAL, 80 HNBR	079727	2

PREPARATION

☐ **1.** Check and record the Combination BOP Test Plug / Wear Bushing R&R Tool part number and serial number.

☐ **2.** Inspect the test plug's LP threads and Tool Joint threads for any damage. Ensure D-Ring and lift lugs are in good condition.

RUNNING

☐ **1.** Install a new BX-160 gasket in the ring groove of the Multibowl Spool and nipple up the Blowout Preventer (BOP) stack.
NOTE: Recommended make-up torque for 1-5/8" DIA Stud is 2119 ft.-lbs. with copper thread compound.

☐ **2.** Make up a joint of drill pipe to the test plug.

Ensure the D-Ring is down and the lift lugs up.

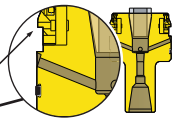

NOTE: If it is intended to test by pumping through the drill pipe, make sure that the four 1/2" LP pipe plugs **are removed**. ***However,*** if the test is to be done by pressurizing through the choke or kill line, the four 1/2" LP pipe plugs **should be installed** and the drill pipe must be properly torqued to the test plug.

☐ **3.** Verify all the lockdown screws (LDS) are ***fully retracted***.

☐ **4.** Open the Multibowl's lower outlet valve to check for leakage past the test plug during BOP test.

☐ **5.** Lubricate the Test Plug's D-Ring with oil or light grease.

☐ **6.** Lower the test plug through the BOP and riser stack until it lands on Multibowl's load shoulder in the lower head.

☐ **7.** Test the BOP stack per operator's requirements. Never exceed 5,000 psi test pressure. Monitor any leakage through the open lower outlet valve.

RETRIEVING

☐ **1.** After a successful test, release pressure and open BOP Rams.

☐ **2.** Drain the fluid from the BOP Stack.

☐ **3.** Pull and retrieve the test plug slowly to avoid damage.

☐ **4.** Close the Multibowl's lower outlet valve.

☐ **5.** Inspect the test plug for any damage. Remove the D-Ring in preparation for use as a RUNNING tool.

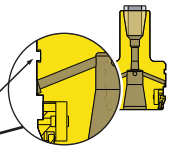

RUNNING and RETRIEVING

DWG-3

Test Plug Configuration

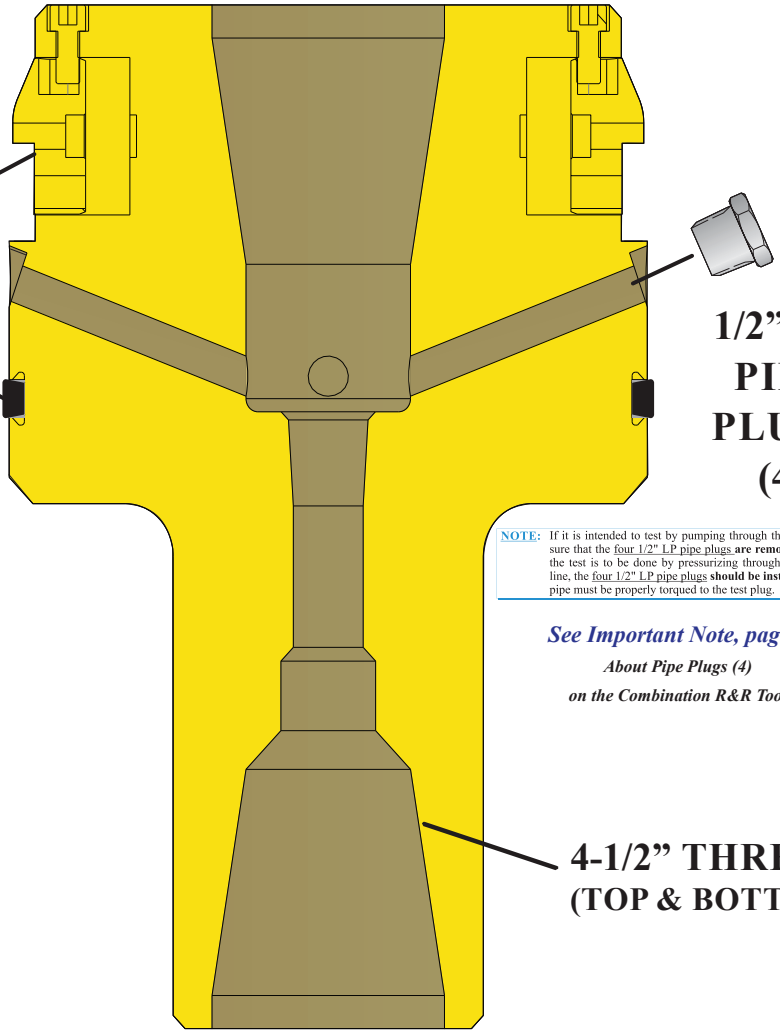

D-Ring is installed when R&R Tool is used as a ***Test Plug***

NOTE: If it is intended to test by pumping through the drill pipe, make sure that the four 1/2" LP pipe plugs **are removed**. ***However***, if the test is to be done by pressurizing through the choke or kill line, the four 1/2" LP pipe plugs **should be installed** and the drill pipe must be properly torqued to the test plug.

See Important Note, page 7
About Pipe Plugs (4) on the Combination R&R Tool

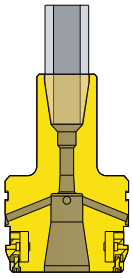

R&R Tool – Flip Tool and remove D-Ring

Shown Above as a ***Test Plug with D-Ring***

COMBINATION TEST PLUG AND RUNNING & RETRIEVAL (R&R) TOOL

RUNNING AND RETRIEVING

DWG-4

Test Plug Run-in

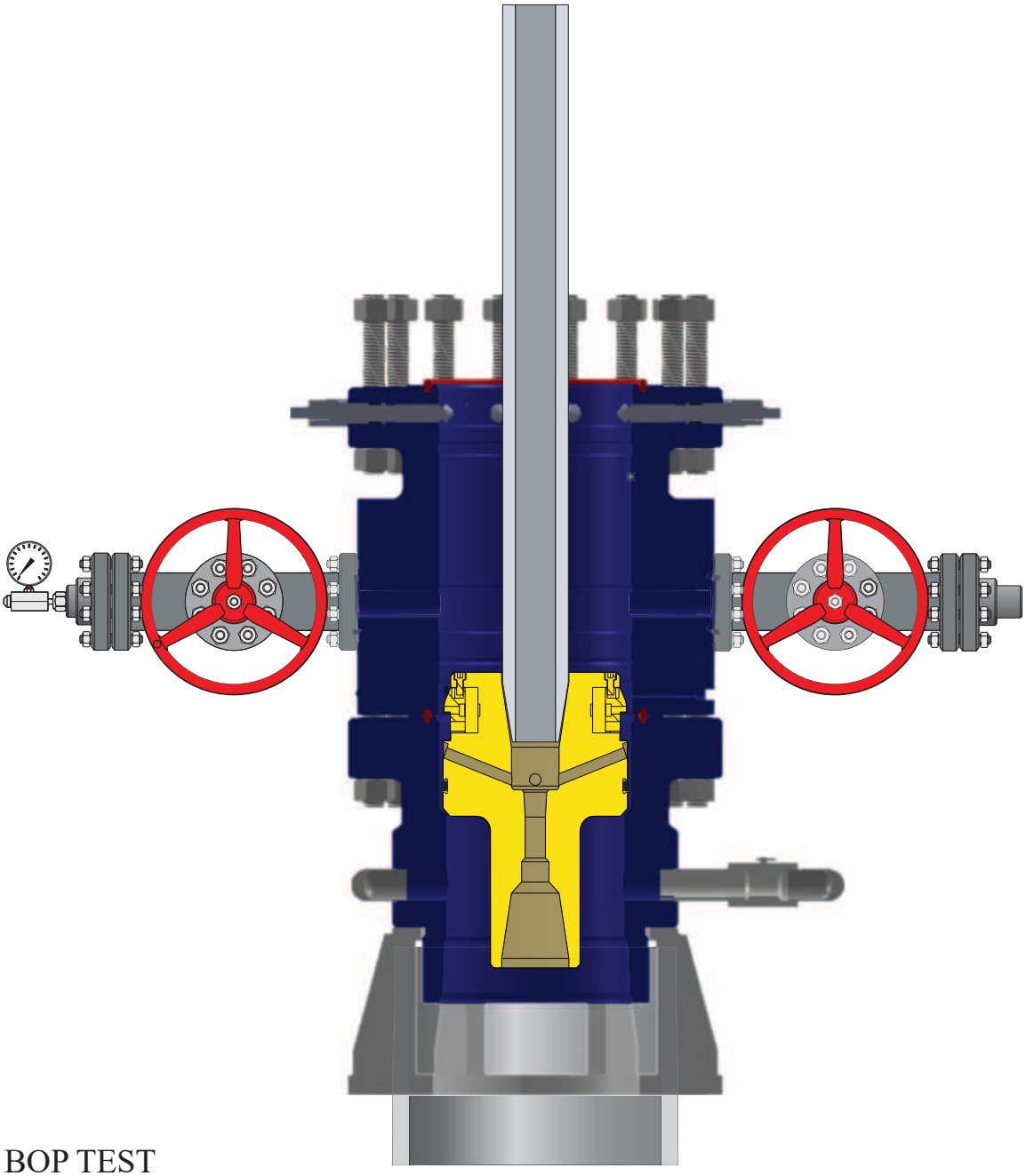

BOP TEST

COMBINATION TEST PLUG

2.4 Running and Retrieving Long Wear Bushing

Equipment List			
Item No.	*Description*	*Part Number*	*Qt\.*
1	LONG WEAR BUSHING	UWS-D025-01	1
2	COMBINATION TEST PLUG/WEAR BUSHING R&R TOOL	UWS-D054-01	1

Recommended Spares			
Item No.	*Description*	*Part Number*	*Qt\.*
1	13-5/8" D-SEAL FOR O.D., 80 HNBR	079727	2

PREPARATION

- ☐ **1.** Check and record Long Wear Bushing and Combination Test Plug/Wear Bushing R&R Tool part numbers and serial numbers.
- ☐ **2.** Inspect Long Wear Bushing ensuring the bore is clean, and the spring-loaded latches function properly. Lubricate the latches with oil or light grease.
- ☐ **3.** Remove the D-Rings from the OD of the running tool for this procedure.

RUNNING

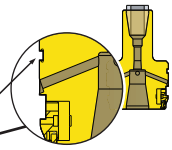

- ☐ **1.** Make up a joint of drill pipe to the Combination R&R Tool. Ensure the lift lugs are down and the D-Ring is removed.
- ☐ **2.** Lower the Combination Tool into the Long Wear Bushing and rotate ***clockwise*** to lock in position.
- ☐ **3.** Verify all the lockdown screws (LDS) in the Multibowl Heads are ***fully retracted***.
- ☐ **4.** Liberally grease the OD of the Wear Bushing.
- ☐ **5.** Slowly lower the assembly through the BOP stack until it lands on the Multibowl's load shoulder
- ☐ **6.** Run in four of the lower Lockdown screws, Snug-tight, at 90 deg. apart in the upper spool of the MBS Assembly.
- ☐ **7.** Remove the Combination R&R Tool from Long Wear Bushing by rotating the drill pipe clockwise 1/4 turn and slowly lifting it straight up.
  NOTE: While retrieving the tool, monitor the weight indicator to ensure the tool is properly disengaged.
- ☐ **8.** Inspect the Combination Tool for any visible damage.
- ☐ **9.** Proceed with drilling for next casing size.

UWS recommends retrieving the wear bushing every bit trip and inspecting for damage.

RETRIEVING

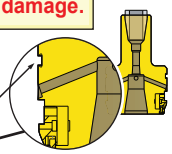

- ☐ **1.** Make up a joint of drill pipe to the Combination R&R Tool. Ensure the lift lugs are down and the D-Ring is removed.
- ☐ **2.** Liberally lubricate the Retrieving Tool and the spring-loaded latches with oil or light grease. Slowly lower the Combination Tool through the BOP stack until it lands on the Long Wear Bushing.
- ☐ **3.** Slack off all weight to make sure the tool is down.
- ☐ **4.** Rotate the tool clockwise to fully engage the lugs in the Long Wear Bushing.
- ☐ **5.** Fully retract all lockdown screws and pull straight up to retrieve the Long Wear Bushing.
- ☐ **6.** Inspect the Combination R&R Tool and the Wear Bushing for any damage. Clean, grease, and store.
- ☐ **7.** Proceed to running the next casing.

2.5 Running and Retrieving Long Wear Bushing

INSTALLATION | **DWG-5**

Long Wear Bushing and
R&R Tool

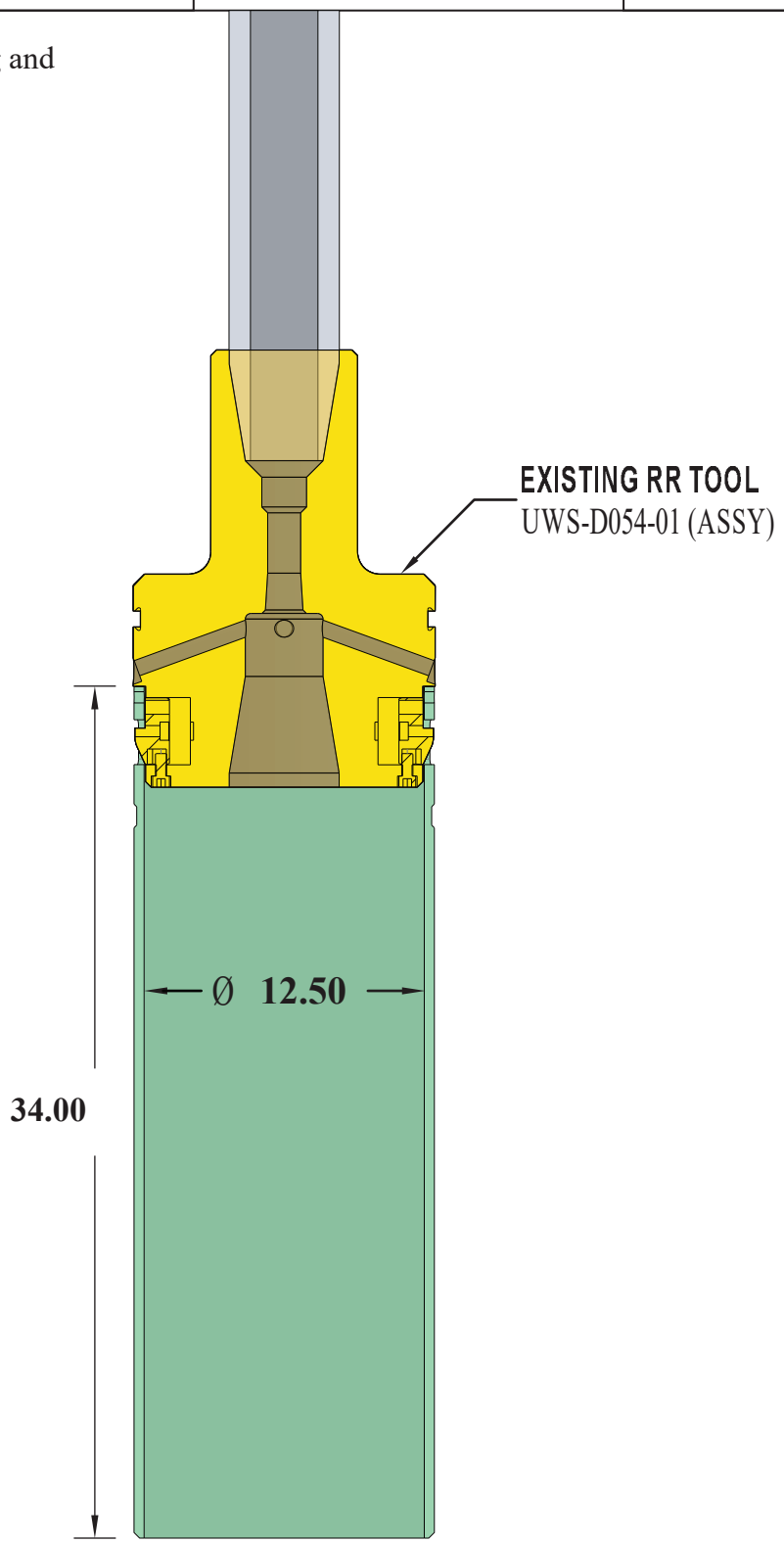

LONG WEAR BUSHING and R&R TOOL

INSTALLATION

DWG-6

Long Wear Bushing
Installed in Wellhead

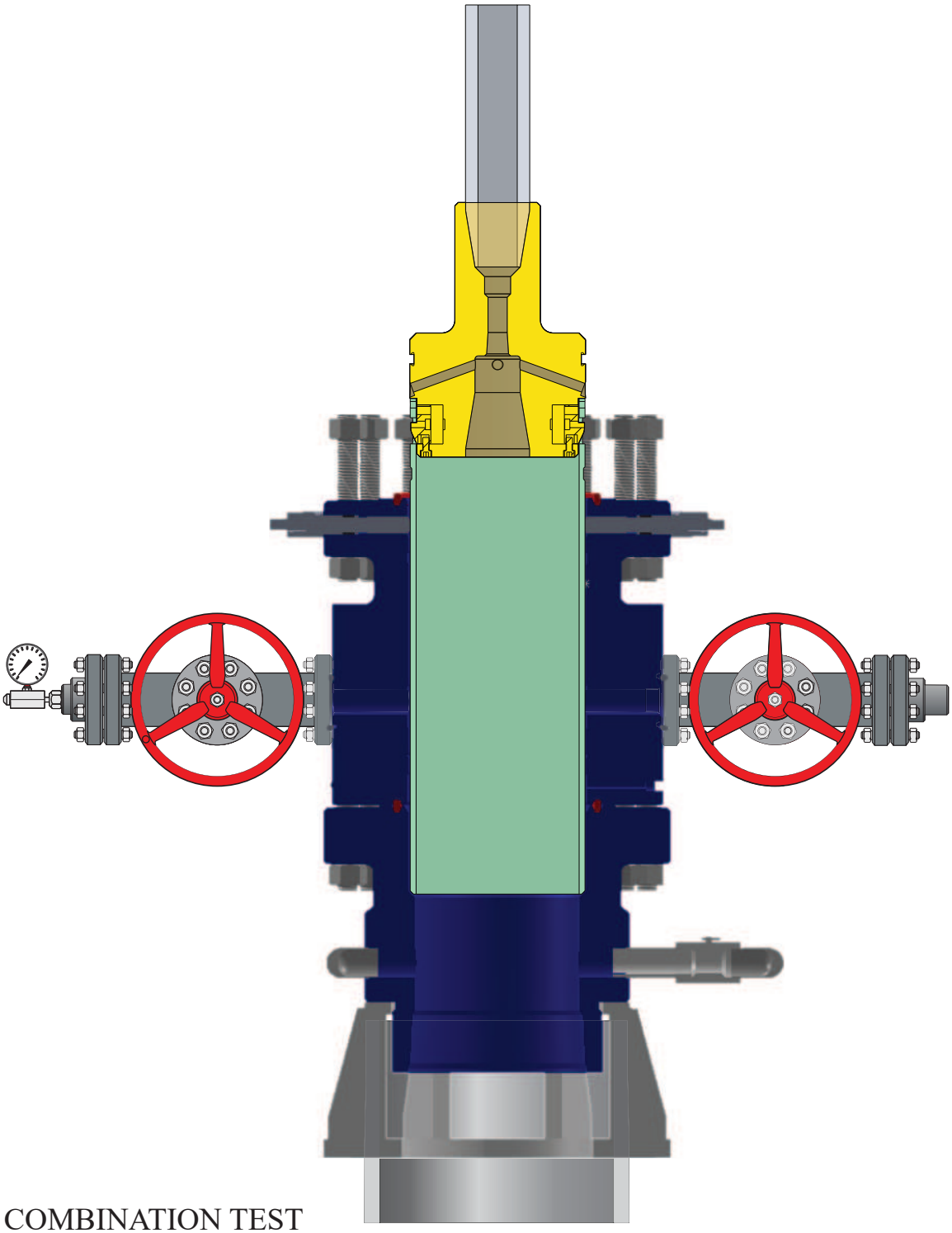

COMBINATION TEST
PLUG AND LONG WEAR BUSHING

2.6 Installation of 9-5/8" Mandrel Casing Hanger

Equipment List			
Item No.	*Description*	*Part Number*	*Qty.*
1	9-5/8" MANDREL CASING HANGER	UWS-D005-01	1
2	9-5/8" MANDREL CASING HANGER R&R TOOL	UWS-D003-01	1

Recommended Spares			
Item No.	*Description*	*Part Number*	*Qty.*
1	9-5/8" ROD SEAL, ID S-SEAL, 80 HNBR	RS9.625HNBR	2

PREPARATION

1. ☐ Check and record Mandrel Casing Hanger and Running Tool part number and serial number.
2. ☐ Inspect the Mandrel Casing Hanger's casing thread and ACME running threads for any damage. Ensure the neck area is clean and in good condition.
3. ☐ Inspect the Running Tool's casing thread and running thread for any damage. Ensure bore and o-ring is clean and in good condition.
4. ☐ **Verify that the Running Tool's .50" width OD groove is painted with fluorescent yellow.**

INSTALLATION

1. ☐ Make up a landing joint to the Running Tool. Ensure to power tight the landing joint to the Running Tool *per API Thread Specications.*
2. ☐ Lightly oil the Hanger's neck OD and running threads.
3. ☐ Make up the Running Tool to the Hanger by rotating counter-clockwise 14 to 16 turns until it bottoms out on the Hanger.
   NOTE: Do not torque to hanger.
4. ☐ Pressure test the Running Tool's seal through the 1/8" LP test port for at least 5 min. or until the Wellsite Supervisor is satisfied.
   Do Not exceed 5,000 psi test pressure.
5. ☐ After a successful test, release pressure and re-install the 1/8" pipe plug.
6. ☐ Lower the Hanger onto the last joint of casing run. Make up the connection to the API thread's recommended optimum torque.
7. ☐ Verify all lockdown screws (LDS) are fully retracted.
8. ☐ Slowly and carefully lower the Hanger through the BOP and land it in the Multibowl.
9. ☐ Slack off all weight on the casing.
10. ☐ Visually verify the yellow paint marking on the Running Tool is in the center of the upper most outlet of the Multibowl indicating that the Hanger is properly landed.

    NOTE: Ensure that the well is safe and there is no pressure before opening the uppermost outlet.
    Close the outlet valve after visual inspection.

11. ☐ Cement as required.
12. ☐ Back off the running tool by ***rotating clockwise*** until thread jump is felt.
13. ☐ Retrieve the landing joint and running tool to the rig floor.
14. ☐ Inspect the running tool for any damage. Clean, grease and store.
15. ☐ Proceed to next operation.

2.7 Running and Retrieving 9-5/8" Casing Hanger

RUNNING and RETRIEVING | **DWG-7**

9-5/8" Mandrel Casing Hanger
R&R Tool

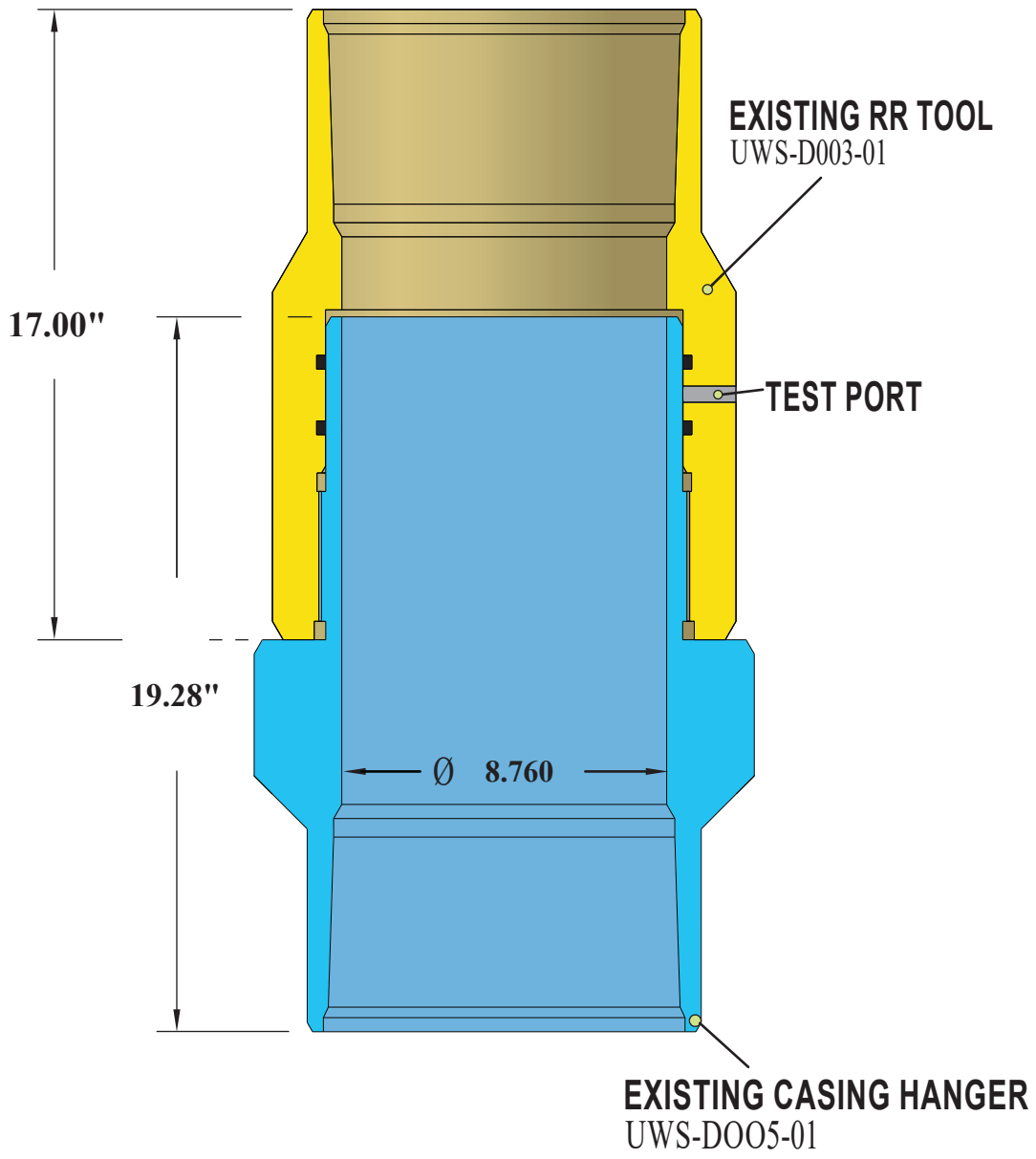

9-5/8" CASING HANGER with R&R TOOL

RUNNING AND RETRIEVING

DWG-8

Mandrel Casing Hanger
Hanger Properly Installed

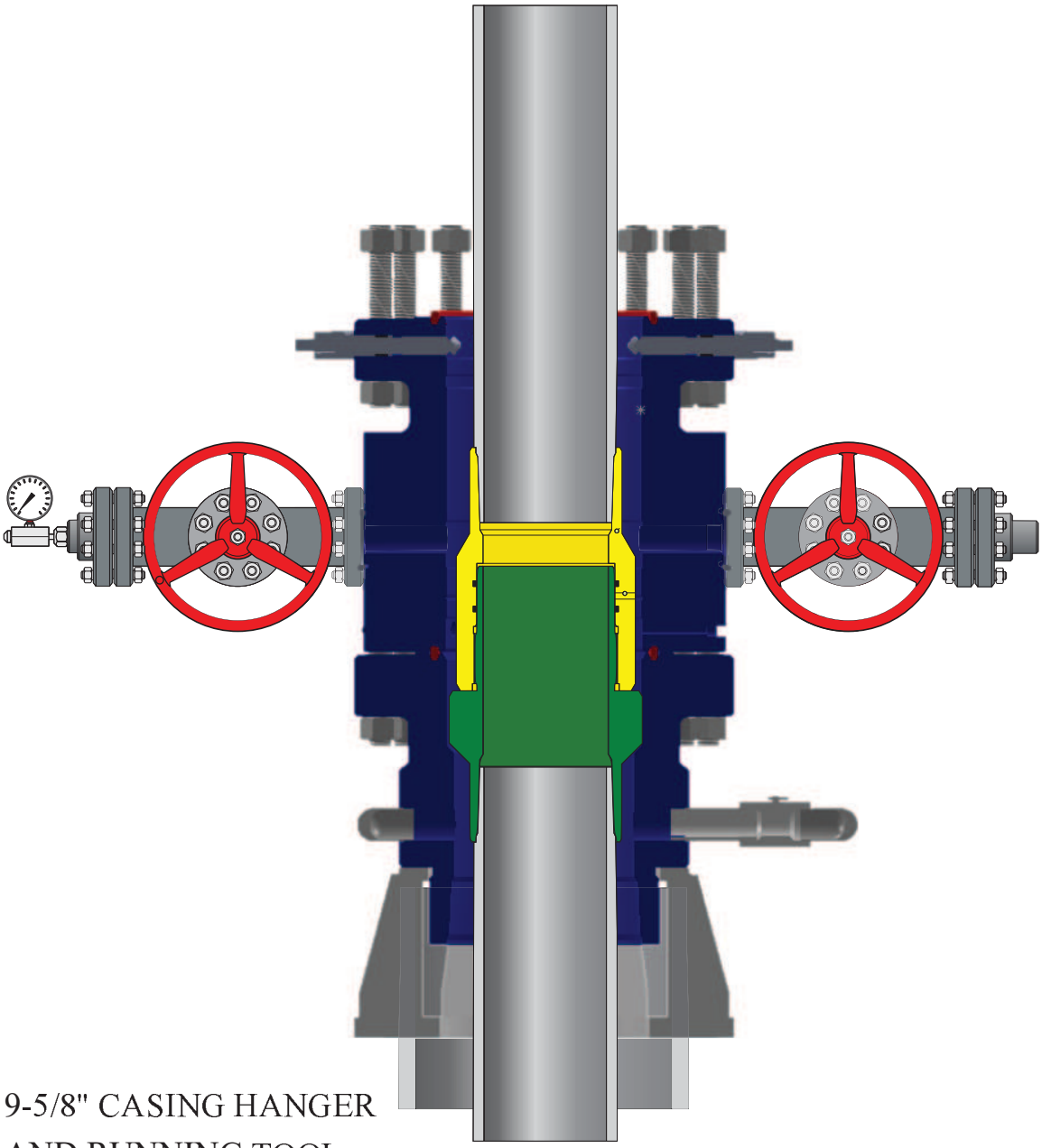

9-5/8" CASING HANGER
AND RUNNING TOOL

2.8 Installation of 9-5/8" Pack-off Support Bushing

Equipment List			
Item No.	*Description*	*Part Number*	*Qty.*
1	9-5/8" PACKOFF SUPPORT BUSHING	UWS-D091-01	1
2	9-5/8" PACKOFF SUPPORT BUSHING R&R TOOL	UWS-D006-01	1
3	WASH OUT TOOL	UWS-D083-01	1

Recommended Spares			
Item No.	*Description*	*Part Number*	*Qty.*
1	9-5/8" FS CASING SEAL, 80 HNBR	FS9.62580HNBR	2
2	13-1/2" OD S-SEAL, 80 HNBR	S13.500X.340HNBR	3

PREPARATION

1. ☐ Check and record Packoff Support Bushing and Running Tool part number and serial number.
2. ☐ Inspect the Packoff's elastomeric seals, ACME running thread, bore, and OD for any damage. Ensure that all are clean and in good condition.
3. ☐ Inspect the Running Tool's ACME running thread and IF thread for any damage. Ensure all are clean and in good condition.
4. ☐ Install Wash Tool on Drill Pipe. Wash out Multibowl and top of casing hanger landing flutes and open lower valves in lower head.

INSTALLATION

1. ☐ Make up a landing joint to the Running Tool. Ensure to power tight the landing joint to the Running tool per API thread's specification.
2. ☐ Lightly oil the Packoff's elastomeric seals and running threads.
3. ☐ Make up the Running Tool to the Packoff by rotating clockwise 7 to 8 turns until it bottoms out on the Packoff. Do not tighten.
4. ☐ Verify all Lockdown Screws (LDS) are fully retracted.
5. ☐ Slowly and carefully lower the Packoff through the BOP and land it on the Hanger inside the Multibowl. ***Note:*** *Heavy drill pipe or drill collar might be required when using FS seals to push down the Packoff into its landing position.*
6. ☐ Verify that the Packoff has landed properly by removing the inspection port plug.
7. ☐ Run Lockdown Screws (LDS) in pairs, 180 degrees apart, at the lower Multibowl. Tighten gland nuts to 350 ft-lbs and LDS to 450 ft-lbs.
8. ☐ Pull the Running Tool to 2,000 lbs to confirm that the Packoff has been successfully locked down.
9. ☐ Slack off tension.
10. ☐ Locate the two Flange Test Ports on the upper Multibowl and remove the test cap from each of the fittings.
11. ☐ Attach a bleeder tool to one of the fittings and open the tool.
12. ☐ Attach a hydraulic test pump to the other fitting and pump hydraulic fluid until a continuous stream flows from the bleeder tool. Close the bleeder tool.
13. ☐ Perform pressure test to 5,000 psi for at least 5 minutes or until the Well Site Supervisor is satisfied.
    Note: *In case of testing against a casing, do not exceed to 80% of casing collapse.*
14. ☐ After a successful test, release pressure. Replace test caps.
15. ☐ Back off the Running Tool by rotating counter-clockwise until the Running Tool disengages from the Packoff.
16. ☐ Retrieve the Running Tool to the rig floor.
17. ☐ Inspect the Running Tool for any damage. Clean, grease, and store.
18. ☐ Proceed to next operation.

RUNNING AND RETRIEVING

DWG-9

Wash Out Tool

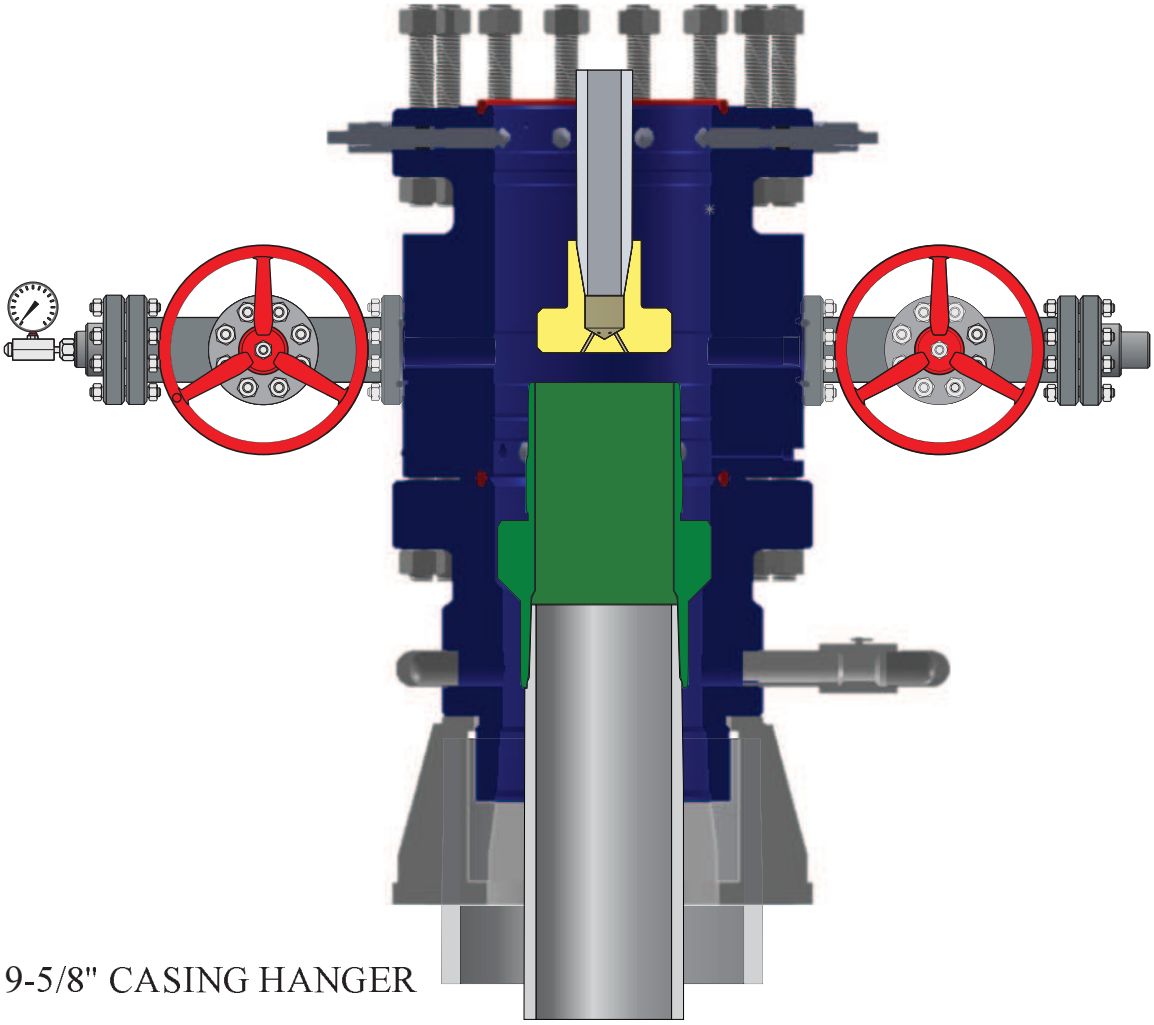

9-5/8" CASING HANGER

INSTALLATION

DWG-10

9-5/8" Pack-off Running Tool

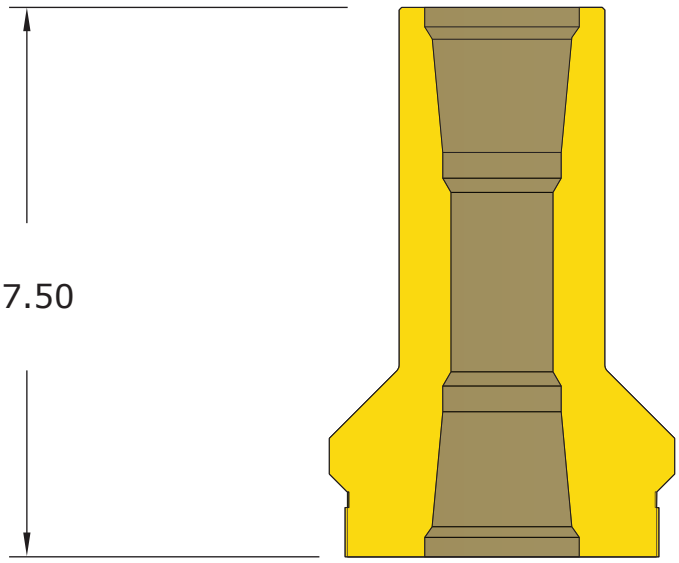

9-5/8" PACK-OFF
R&R TOOL
UWS-D006-01

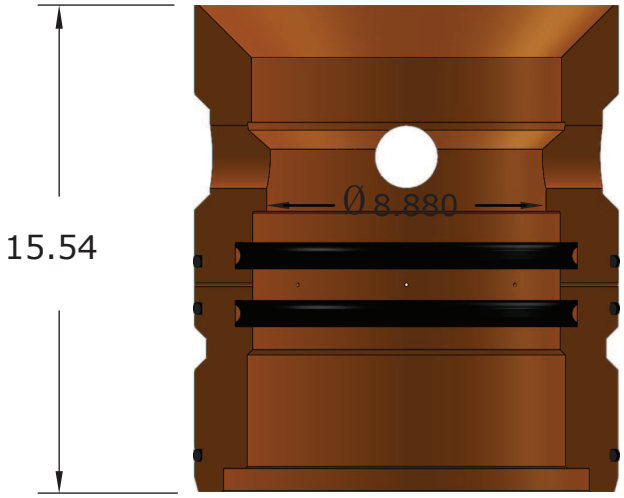

13-5/8" X 9-5/8"
PACK-OFF
UWS-D091-01

W/ 9-5/8" FS SEAL ID

W/ 13-1/2" S-SEAL OD

USE UWS-D091-01 F/ STANDARD (MANDREL HANGER) AND EMERGENCY APPLICATIONS

9-5/8" CASING HANGER PACK-OFF / R&R TOOL

RUNNING AND RETRIEVING

DWG-11

Hanger Pack-off
Installed

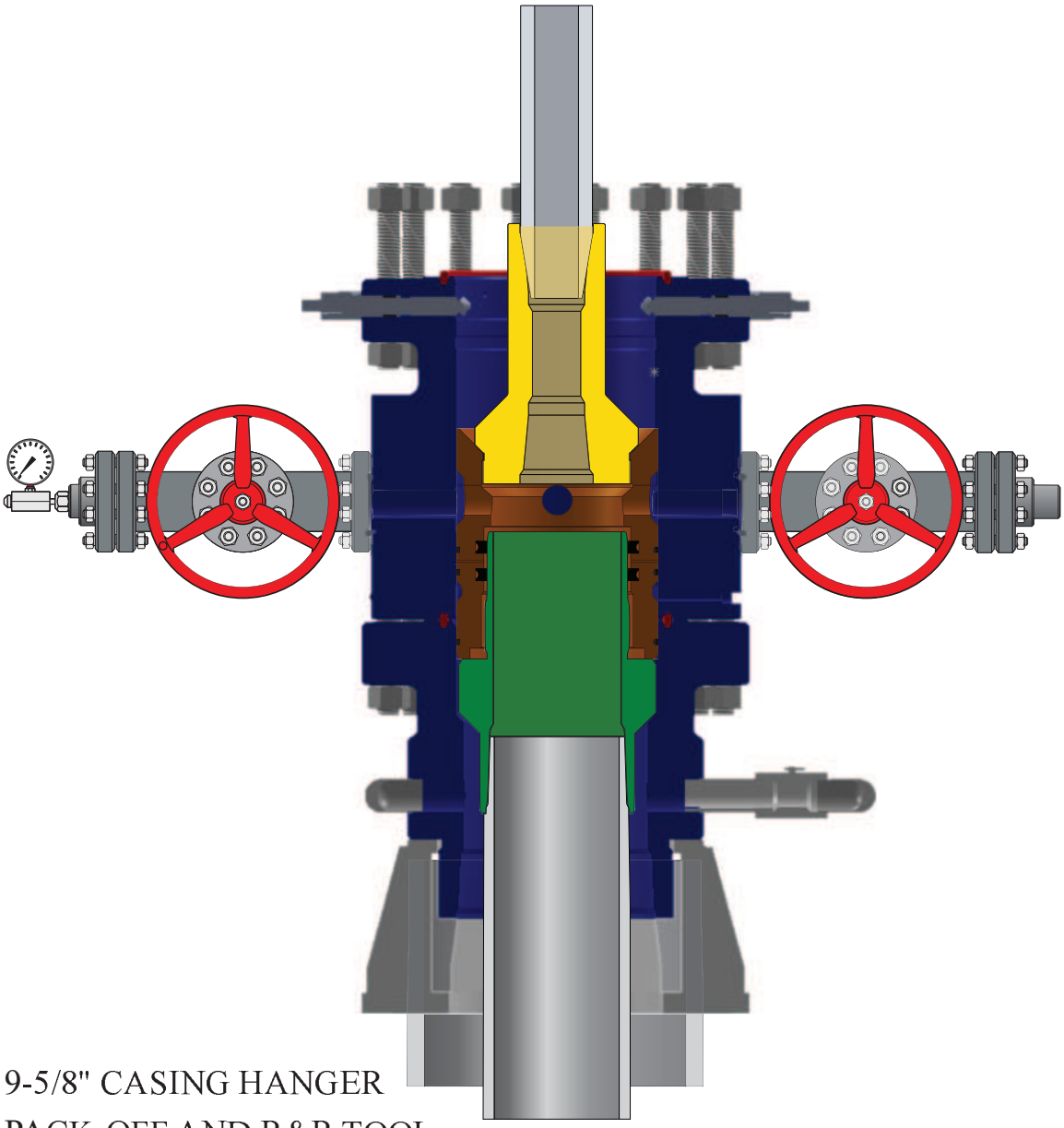

9-5/8" CASING HANGER
PACK-OFF AND R&R TOOL

2.9 Running and Retrieving Combination BOP Test Plug / R&R Tool

Equipment List			
Item No.	*Description*	*Part Number*	*Qty.*
	COMBINATION TEST PLUG / WEAR BUSHING R&R TOOL	UWS-D054-01	1

Recommended Spares			
Item No.	*Description*	*Part Number*	*Qty.*
1	13-5/8" D-SEAL, 80 HNBR	079727	1

PREPARATION

1. ☐ Check and record the Combination BOP Test plug and Wear Bushing R&R Tool part number and serial number.
2. ☐ Inspect the test plug's LP threads and tool joints threads for any damage. Ensure the D-Rings are properly installed and in good condition.

RUNNING

1. ☐ Make up a joint of drill pipe to the test plug. Ensure the o-ring is down and the lift lugs up.

   Note: *If it is intended to test by pumping through the drill pipe, make sure that the four 1/2" LP pipe plugs are removed. However, if the test is to be done by by pressurizing through the choke or kill line, the four 1/2" LP pipe plugs should be installed and the drill pipe must be properly torqued to the test plug.*

2. ☐ Verify lockdown screws (LDS) in the top Àange are fully retracted.
3. ☐ Open the Multibowl's upper outlet valve to check for leakage past the test plug during BOP test.
4. ☐ Lightly oil test plug's seal.
5. ☐ Lower the test plug through the BOP and riser stack until it lands on top of the Packoff Support Bushing.
6. ☐ Test the BOP stack per operator's requirements.
   Never exceed 5,000 psi test pressure.
   Monitor any leakage through the open lower outlet valve.

RETRIEVING

1. ☐ After a successful test, release pressure and open BOP rams.
2. ☐ Drain the Àuid from BOP stack.
3. ☐ Pull and retrieve the test plug slowly to avoid damage.
4. ☐ Close the Multibowl's upper outlet valve.
5. ☐ Inspect test plug for any damage.
   Replace o-ring if necessary.
   Clean, grease, and store.

RUNNING AND RETRIEVING

DWG-12

BOP Stack Test w/
Combination Test Plug

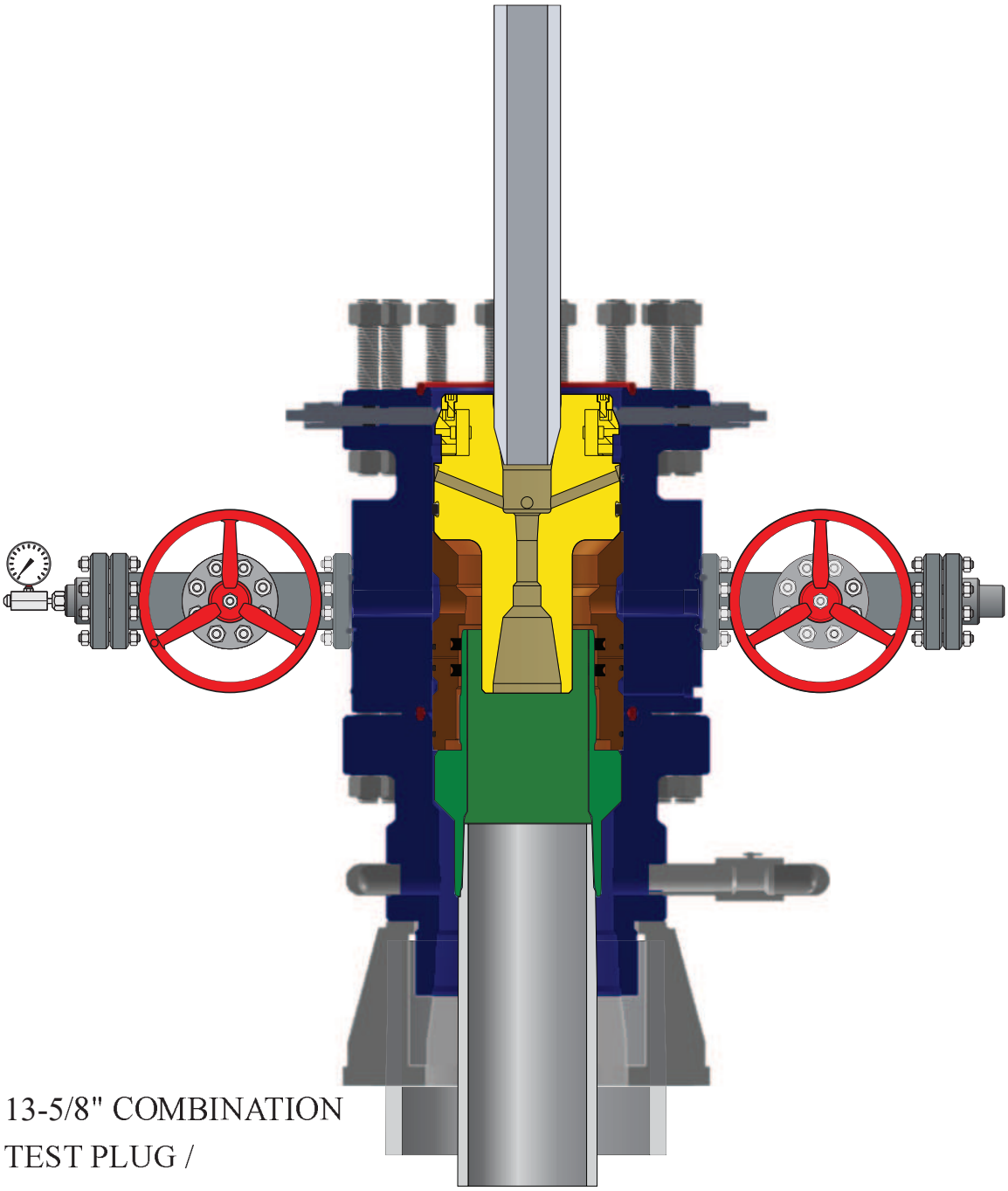

13-5/8" COMBINATION
TEST PLUG /
WEAR BUSHING R&R TOOL

3.0 Running and Retrieving Short Wear Bushing

Equipment List			
Item No.	*Description*	*Part Number*	*Qty.*
1	SHORT WEAR BUSHING ASSEMBLY	UWS-D026-01	1
2	COMB. TEST PLUG/WEAR BUSHING R&R TOOL	UWS-D054-01	1

Recommended Spares			
Item No.	*Description*	*Part Number*	*Qty.*
1	SPRING LOADED LIFT LUG BODY	UWS-D022-01	2

PREPARATION

1. ☐ Check and record Short Wear Bushing and Combination Test Plug / Wear Bushing R&R Tool part numbers and serial numbers.
2. ☐ Inspect Short Wear Bushing ensuring the Bore is clean, and the spring-loaded latches are operational, and lubricated with oil.

RUNNING

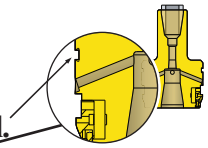

1. ☐ Make up a joint of drill pipe to the Combination R&R Tool. Ensure the lift lugs are down. **Remove the D-Ring from the tool.**
2. ☐ Lower the Combination Tool into the Short Wear Bushing and rotate ***clockwise*** to the locked position.
3. ☐ Verify all lockdown screws (LDS) in the top flange of Multibowl are fully retracted.
4. ☐ Liberally grease the OD of the wear bushing - **Do Not install dry.**
5. ☐ Slowly lower the assembly through the BOP stack until it lands on top of the Packoff Support Bushing.
6. ☐ Run in the four lockdown screws (LDS) snug tight, 90 deg. apart, located on the the upper spool.
7. ☐ Remove the Combination Tool from Short Wear Bushing by rotating the drill pipe clockwise 1/4 turn and slowly lifting straight up. ***Note:*** *While retrieving the tool, monitor the weight indicator to ensure the tool is properly disengaged.*
8. ☐ Inspect the Combination Tool for any visible damage.
9. ☐ Proceed with drilling for next casing size.

UWS recommends retrieving the wear bushing every bit trip and inspecting for damage.

RETRIEVING

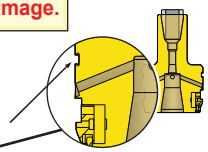

1. ☐ Make up a joint of drill pipe to the Combination R&R Tool. Ensure the lift lugs are down and **the D-Ring is removed.**
2 ☐ Lubricate the OD of the tool and the spring loaded-latches with oil or light grease.
3. ☐ Slowly lower the Combination Tool through the BOP stack until it lands on the Short Wear Bushing.
4. ☐ Slack off all weight to make sure the tool is down.
5. ☐ Rotate the tool clockwise to fully engage the lugs in the Short Wear Bushing.
6. ☐ Fully retract all lockdown screws (LDS) in the top flange of the Multibowl and pull straight up to retrieve the Short Wear Bushing.
7. ☐ Inspect the R&R Tool and Wear Bushing for any damage. Clean, grease and store.
8. ☐ Proceed to running the next casing.

RUNNING AND RETRIEVING

DWG-13

Running / Retrieving
Short Wear Bushing

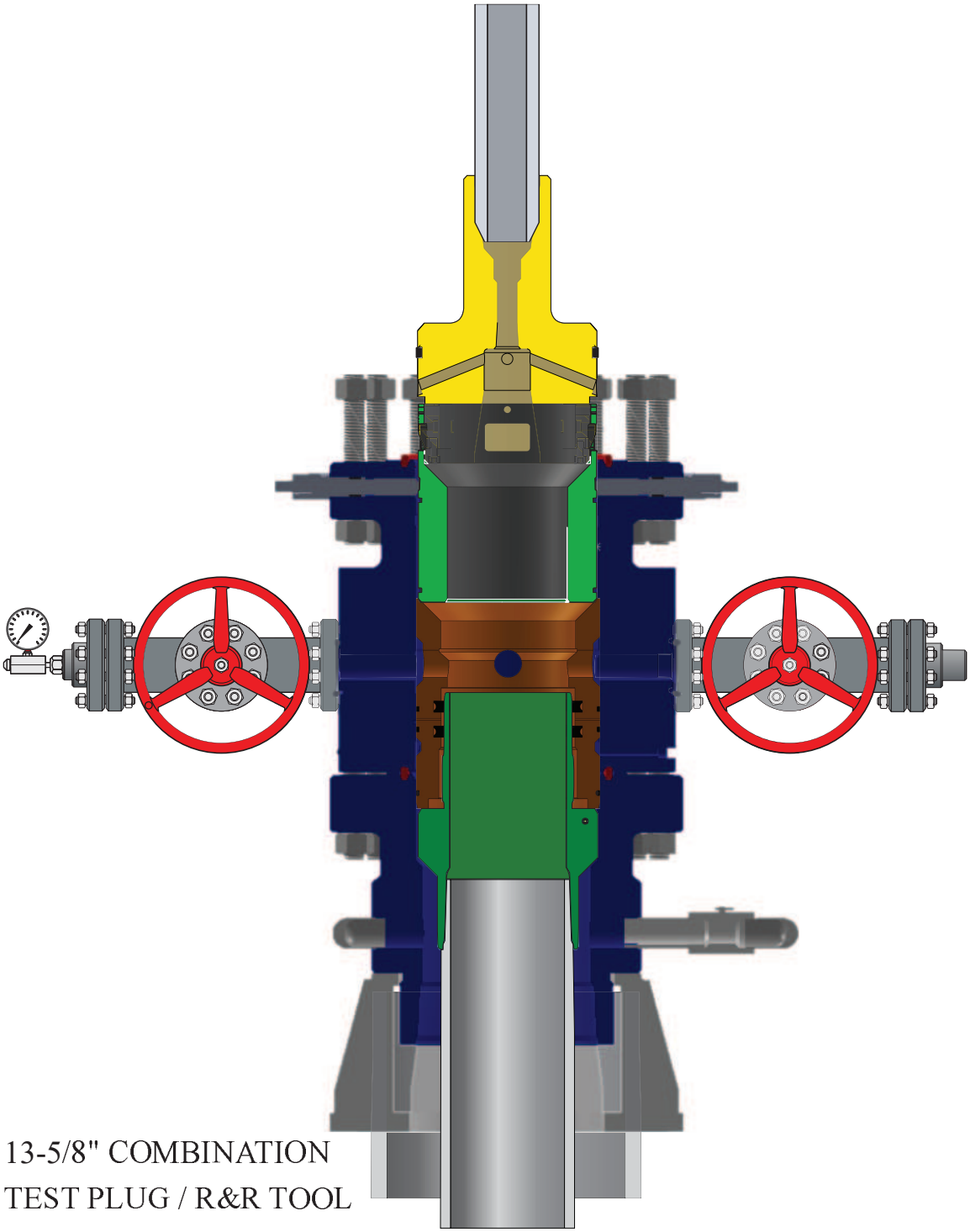

13-5/8" COMBINATION
TEST PLUG / R&R TOOL
& SHORT WEAR BUSHING

3.1 Installation of 7" Mandrel Casing Hanger

Equipment List			
Item No.	*Description*	*Part Number*	*Qty.*
1	7" MANDREL CASING HANGER	UWS-D178-01	1
2	7" MANDREL CASING HANGER R&R TOOL	UWS-D061-02	1

Recommended Spares			
Item No.	*Description*	*Part Number*	*Qty.*
1	7" ROD SEAL, I.D. S-SEAL, 80 HNBR	RS7.000HNBR	2

PREPARATION

1. ☐ Check and record Mandrel Casing Hanger and Running Tool part number and serial number.
2. ☐ Inspect the Mandrel Casing Hanger's casing thread and ACME running threads for any damage. Ensure the neck seal area is clean and in good condition.
3. ☐ Inspect the Running Tool's casing thread and running thread for any damage Ensure bore and o-ring is clean and in good condition.

INSTALLATION

1. ☐ Make up a landing joint to the Running Tool. Ensure to power tight the landing joint to the Running Tool per ***API Thread Specifications.***
2. ☐ Lightly oil the Hangers neck OD, the seals on the tool ID, and the running threads.
3. ☐ Make up the Running Tool to the Hanger by rotating counter-clockwise 16 to 17 turns until it bottoms out on the Hanger. ***Note:*** *Do not torque to hanger.*
4. ☐ Pressure test the Running Tool's seal through the 1/8" LP test port for at least 5 min. or until well site Supervisor is satisfied. Do not exceed 5,000 psi test pressure.
5. ☐ After a successful test, release pressure and re-install the 1/8" test plug.
6. ☐ Lower the Hanger onto the last joint of casing run. Make up the connection to the API thread's recommended optimum torque.
7. ☐ Verify all lockdown screws (LDS) on the upper portion of the Multibowl are fully retracted.
8. ☐ Slowly and carefully lower the Hanger through the BOP and land it on top of the Packoff Support Bushing.
9. ☐ Slack off all weight on the casing.
10. ☐ Verify that the Casing Hanger has landed properly by making measurement on its setting depth.
11. ☐ Cement as required.
12. ☐ Back off the Running Tool by rotating clockwise until the thread jump can be felt.
13. ☐ Retrieve the landing joint and running tool to the rig floor.
14. ☐ Inspect the Running tool for any damage. Clean, grease, and store.
15. ☐ Proceed to next operation.

INSTALLATION

DWG-14

7" Mandrel Casing Hanger

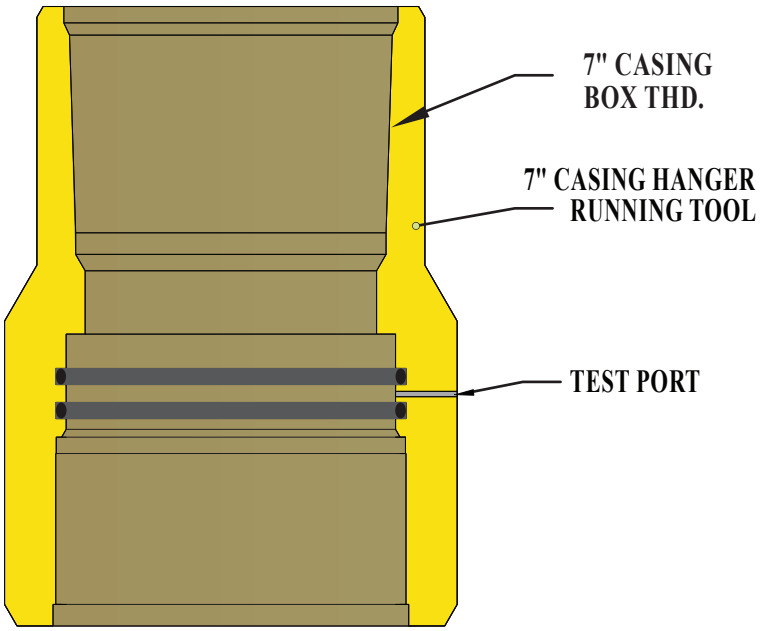

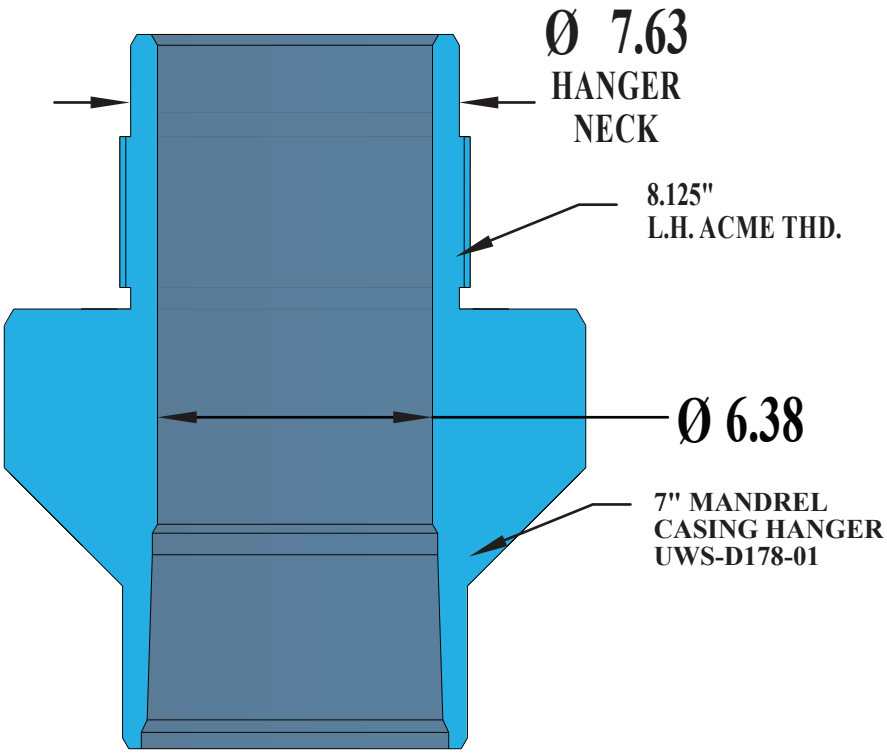

7" CASING HANGER with R&R TOOL

RUNNING AND RETRIEVING

DWG-15

7" Mandrel Casing Hanger Installation

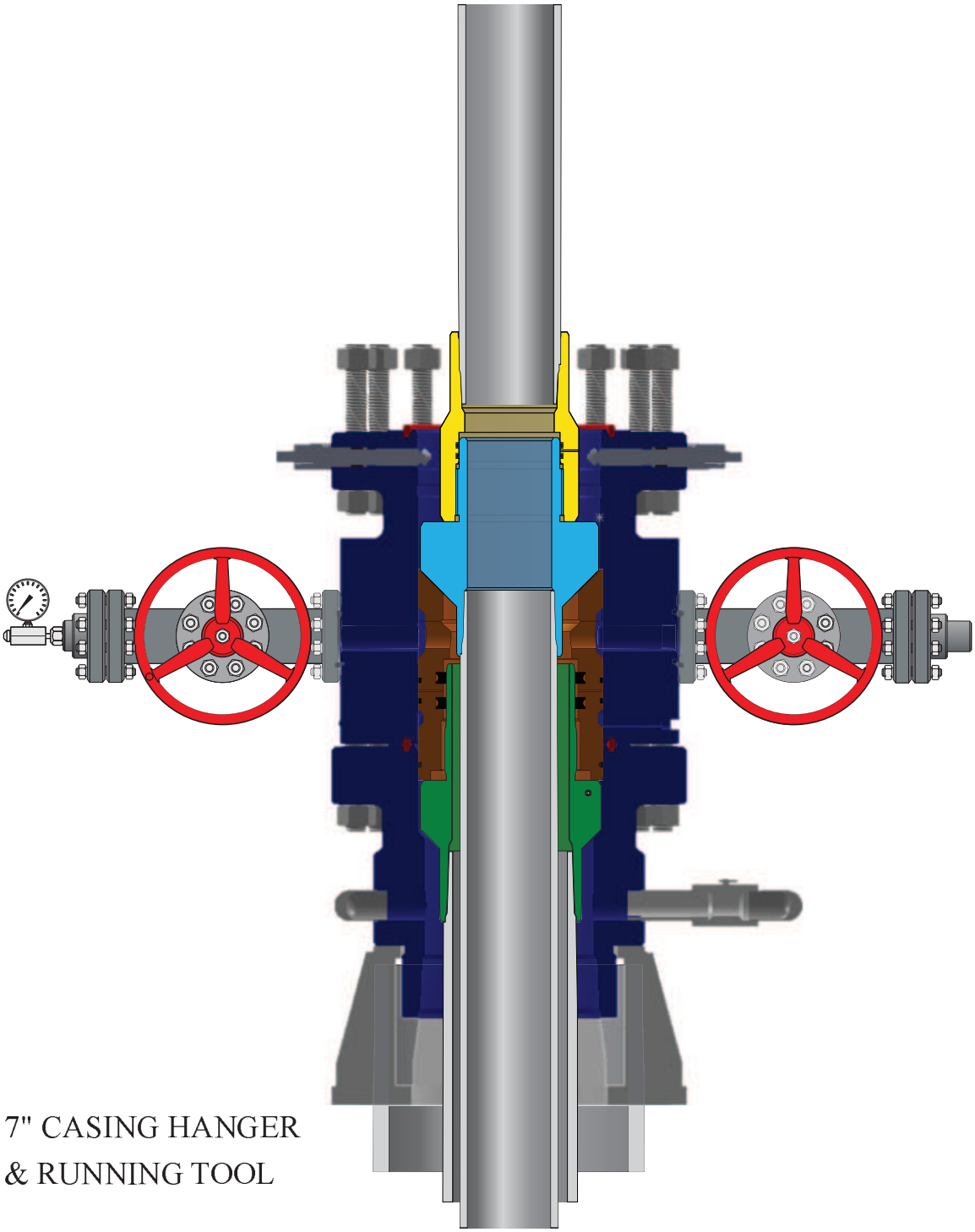

7" CASING HANGER & RUNNING TOOL

3.2 Installation of 7" Pack-off

Equipment List			
Item No.	*Description*	*Part Number*	*Qty.*
1	7" PACKOFF BUSHING	UWS-D180-01	1
2	7" PACK-OFF R&R TOOL	UWS-D179-01	1
3	WASH TOOL	UWS-D083-01	1
4	7" BIT GUIDE / NECK PROTECTOR	UWS-D100-01	1

Recommended Spares			
1	13-1/2"x.340 CS S-Seal, 80HNBR	S13.500X.340HNBR	2
2	10-7/8" S-Seal, 80HNBR	S10.875HNBR	2
3	7-5/8" FS-SEAL, 80HNBR	FS7.62580HNBR	2

PREPARATION

1. ☐ Check and record Pack-off Bushing and Running Tool part number and serial number.
2. ☐ Ensure the Neck Protector is properly secured to the Pack-off Bushing with set screws. Bit Guide / Neck Protector is installed on the Pack-off Bushing
3. ☐ Inspect the Pack-off's elastomeric seals, ACME running thread, bore and OD for any damage. Ensure that all are clean and in good condition
4. ☐ Inspect the Running Tool's ACME running thread and IF thread for any damage. Ensure all are clean and in good condition.
5. ☐ Install the wash tool on drill pipe. Wash out Multibowl and top of casing hanger landing flutes, and open lower valves in lower head.

INSTALLATION

1. ☐ Make up a landing joint to the Running Tool. Ensure to power tight the landing joint to the Running Tool per ***API Thread Specifications.***
2. ☐ Lightly oil the Pack-off and Bit Guide elastomeric seals and running threads, and verify Bit Guide is installed on Pack-off with set screws.
3. ☐ Make up the Running Tool to the Pack-off by rotating ***counter clockwise*** 5 to 6 turns until it bottoms out on the Pack-off. Do not tighten.
4. ☐ Verify all lockdown screw (LDS) are fully retracted
5. ☐ Slowly and carefully lower the Packoff through the BOP and land it on the Hanger inside the Multibowl.
   Note: *Heavy drill pipe or drill collar might be required as additional weight to push down the Packoff into its landing position.*
6. ☐ Verify that the Packoff has landed properly by making measurement on its setting depth.
7. ☐ Run lockdown screws (LDS) in pairs, 180 degrees apart, at the Multibowl. Tighten gland nuts to 350 ft-lbs, and LDS to 450 ft-lbs.
8. ☐ Pull the Running Tool to 2,000 lbs to confirm that the Pack-off has been successfully locked down.
9. ☐ Slack off tension, and re-check LDS Torque
10. ☐ Back off the Running Tool by rotating ***clockwise*** until the Running Tool disengages from the Pack-off.
11. ☐ Retrieve the Running Tool to the rig Àoor.
12. ☐ Inspect the Running Tool for any damage. Clean, grease, and store.
13. ☐ Proceed to next operation.

RUNNING AND RETRIEVING

DWG-16

Wash Tool

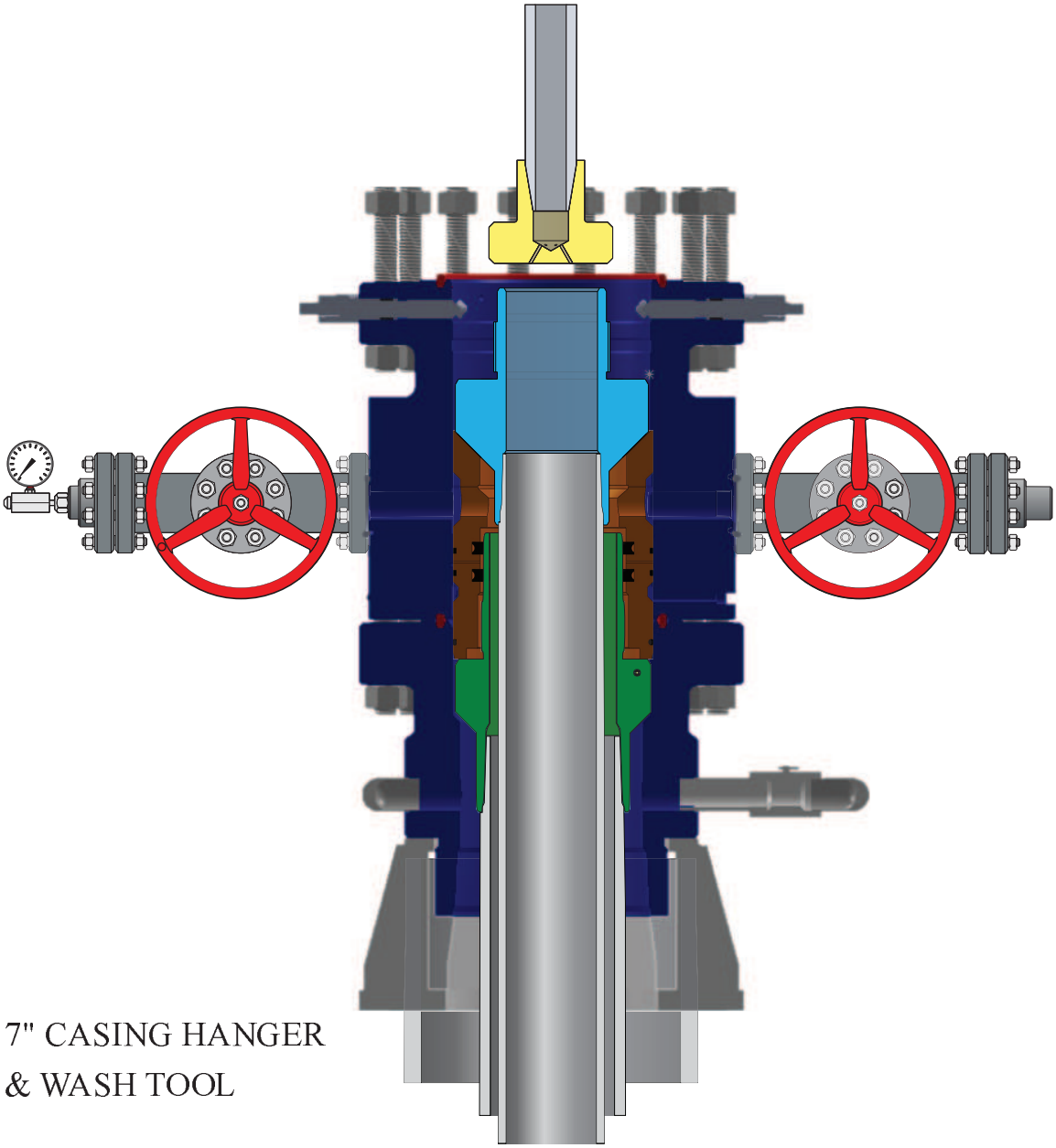

7" CASING HANGER
& WASH TOOL

RUNNING AND RETRIEVING

DWG-17

7" Pack-Off

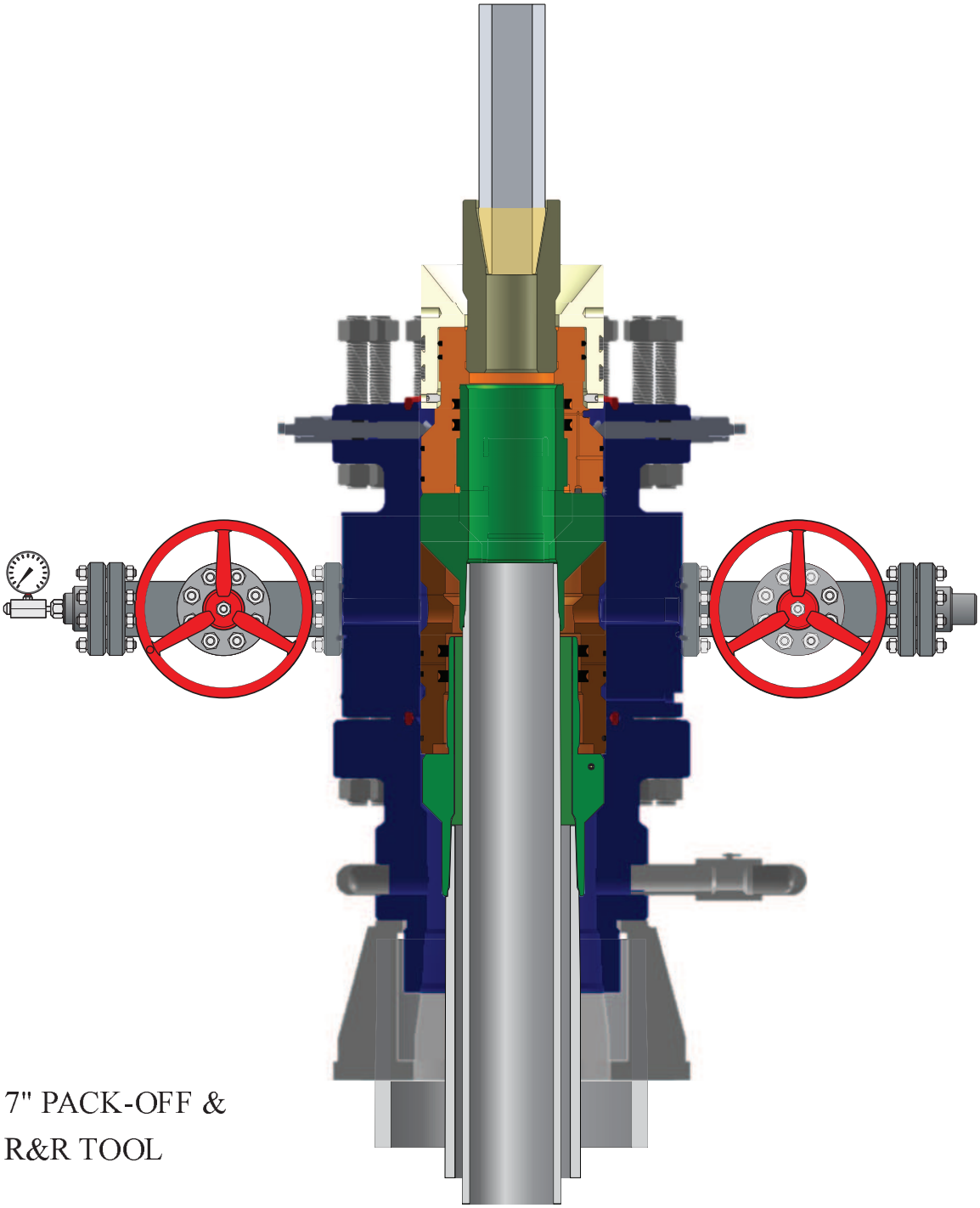

7" PACK-OFF &
R&R TOOL

RUNNING AND RETRIEVING

DWG-18

Tubing Head
Installation

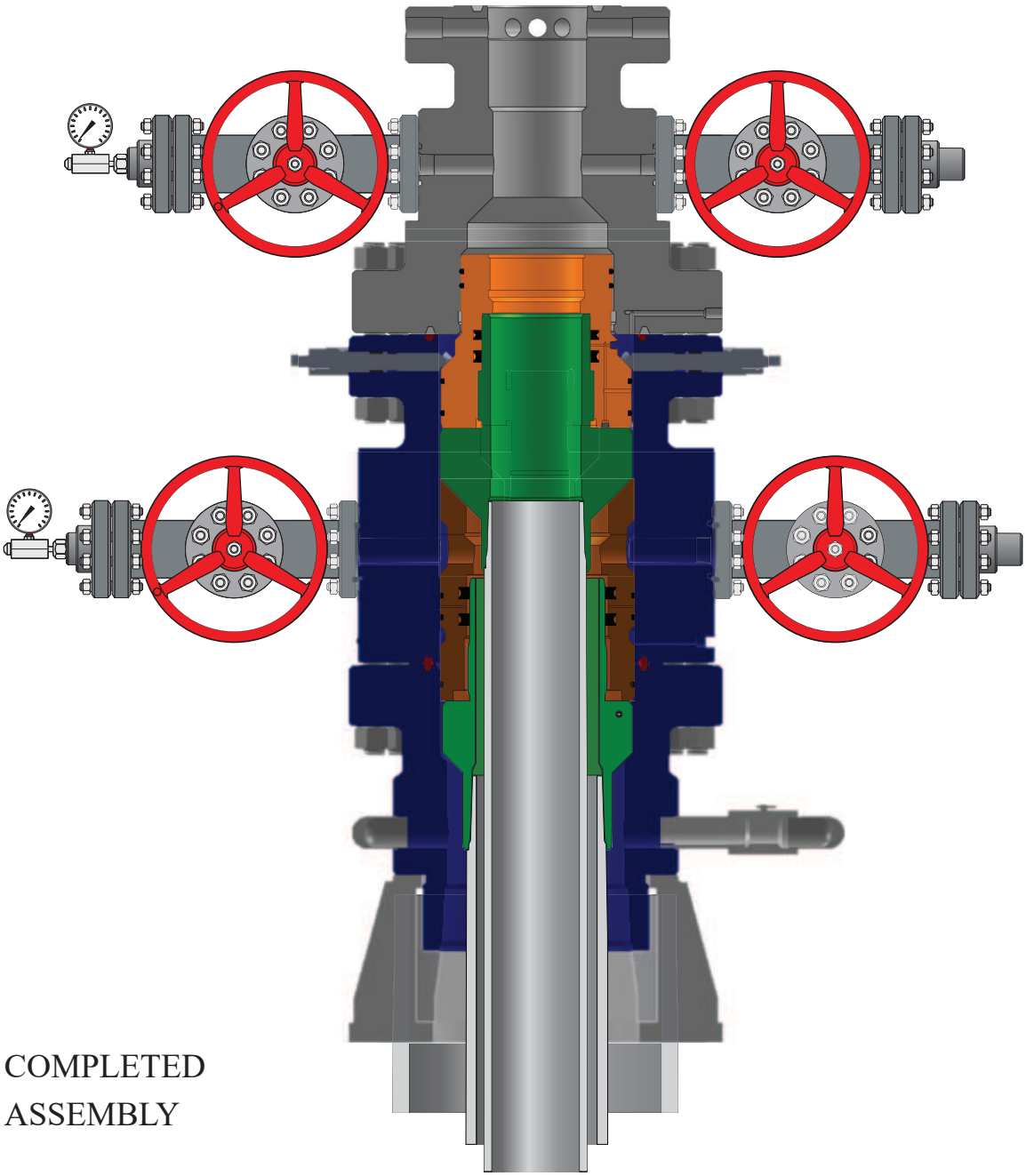

COMPLETED
ASSEMBLY

3.3 Installation of Emergency Equipment

Equipment List			
Item No.	*Description*	*Part Number*	*Qty.*
1	9-5/8" SLIP CASING HANGER	07-10-90-0001	1

Recommended Spares			
Item No.	*Description*	*Part Number*	*Qty.*
1	-	-	-

Note: The following procedure is only applicable in case of stuck casing in hole.

PREPARATION

1. ☐ Check and record Slip Casing Hanger Assembly part number and serial number.
2. ☐ Inspect the Slip Casing Hanger's segment for any damage. Ensure all screws are in place.

INSTALLATION

1. ☐ Cement the casing as required.
2. ☐ Drain the bowl through the side outlet valve on the Multibowl.
3. ☐ Separate the Upper Multibowl from the Lower Head. ***Note:*** *Ensure that the well is safe and there is no pressure before breaking the connection.*
4. ☐ Lift the Upper Multibowl and suspend it above the Lower Head – high enough to install the Slip Casing Hanger.
5. ☐ Washout the Lower Head's bowl as necessary.
6. ☐ Remove the slip bowl latch screw (not the slip retainer screws) to open the Hanger.
7. ☐ Place two boards on the Lower Head's top flange against the casing.
8. ☐ Wrap the Hanger around the casing using the boards for support.
9. ☐ Replace the latch screw.
10. ☐ Grease the Hanger's body and remove the slip retaining screws.
11. ☐ Remove the boards and allow the Hanger to drop into the Lower Head's bowl. ***Note:*** *Ensure to center the casing as much as possible using a catline.*
12. ☐ Ensure that Hanger is properly seated by tapping down on the slip bowl.
13. ☐ Pull tension on the casing to the desired hanging weight and slowly slacken off tension to load the casing weight onto Hanger.

    Note: *Weight suspended on the hanger is the weight with which the weight indicator* ***registers as a sharp decrease.*** *If the desired weight has not been achieved, lift the casing load and repeat the procedure.*
14. ☐ Rough cut the casing approximately 12" above the Lower Head's top flange.
15. ☐ Final cut the casing at 5-1/2" +/- 1/8" above the top flange and bevel cut the stub to specifications. ***Note:*** *Ensure the stub is properly beveled without any rough edges that could damage the Packoff's seals.*
16. ☐ Verify the mating ring grooves of the Upper Multibowl and Lower Head are clean and in good condition.
17. ☐ Install new BX-160 ring gasket onto Lower Head's ring groove.
18. ☐ Re-install the Upper Multibowl.
    Note: *Recommended make-up torque for 1-5/8" diameter stud is* 2119 ft.-lbs. with copper thread compound.
19. ☐ Proceed to installation of 9-5/8" Packoff Support Bushing. *Refer to page 16 for detailed instructions.*
    Use the pack-off support bushing with the FS seals in the ID.

EMERGENCY EQUIPMENT

DWG-19

9-5/8" Emergency
Casing Hanger

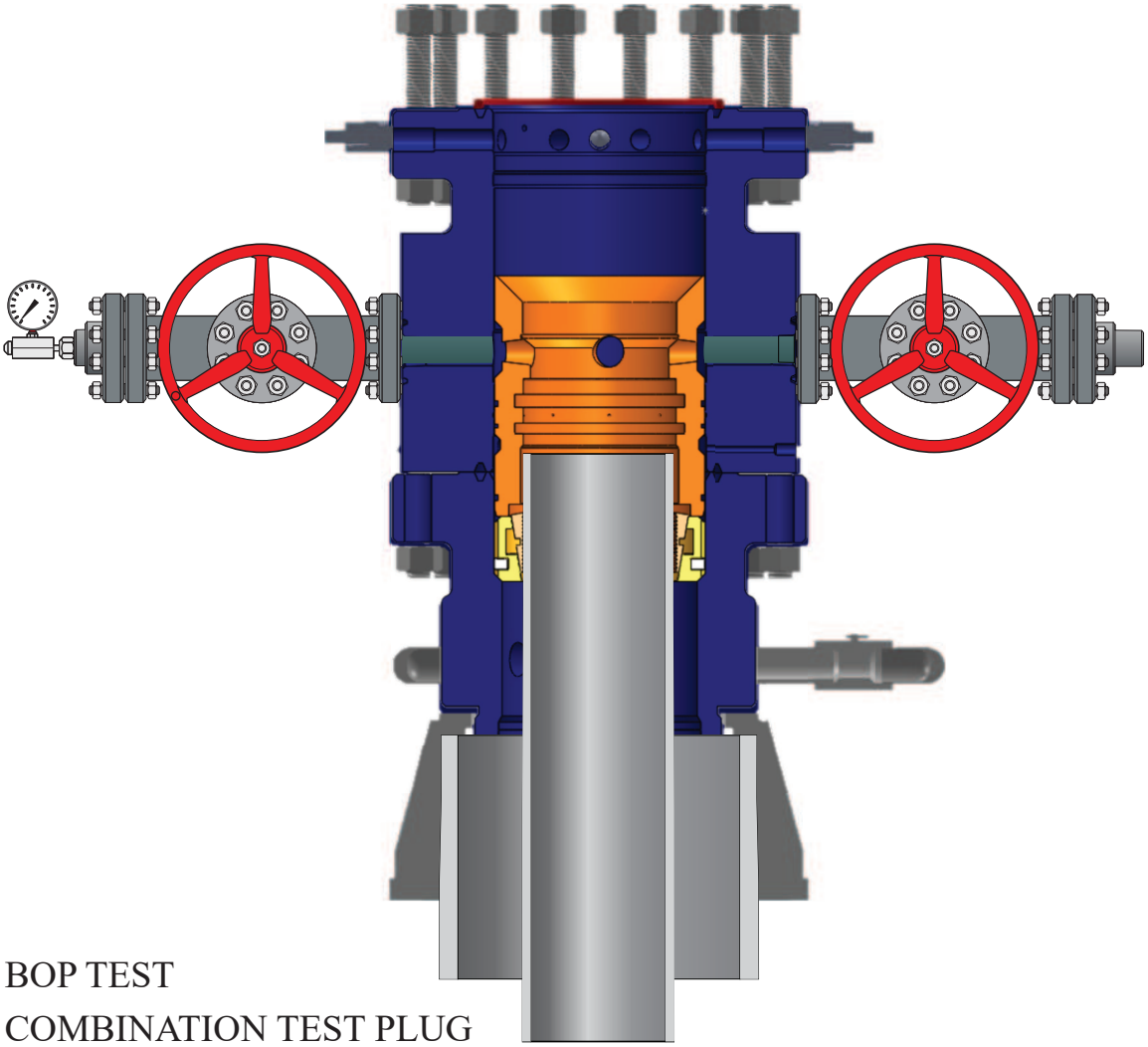

BOP TEST
COMBINATION TEST PLUG

3.4 Installation of 7" Slip Casing Hanger

Equipment List			
Item No.	*Description*	*Part Number*	*Qty.*
1	7" SLIP CASING HANGER	07-10-90-0002	1

Recommended Spares			
Item No.	*Description*	*Part Number*	*Qty.*
1	-	-	-

PREPARATION

1. ☐ Check and record Slip Casing Hanger Assembly part number and serial number.
2. ☐ Inspect the Slip Casing Hanger's segment for any damage.
   Ensure all screws are in place.

INSTALLATION

1. ☐ Cement the casing as required.
2. ☐ Drain the bowl through the side outlet valve on the Multibowl.
3. ☐ Nipple down the BOP stack. ***Note:*** *Ensure that the well is safe and there is no pressure before breaking the connection.*
4. ☐ Lift the BOP Stack and suspend it above the Multibowl high enough to install the Slip Casing Hanger
5. ☐ Washout the Multibowl's bowl as necessary.
6. ☐ Remove the slip bowl latch screw (not the slip retainer screws) to open the Hanger.
7. ☐ Place two boards on the Multibowl's top flange against the casing.
8. ☐ Wrap the Hanger around the casing using the boards for support.
9. ☐ Replace the latch screw.
10. ☐ Grease the Hanger's body and remove the slip retaining screws.
11. ☐ Remove the boards and allow the Hanger to drop on top of the Pack-off Bushing.
    Note: *Ensure to center the casing as much as possible using a catline.*
12. ☐ Ensure that Hanger is properly seated by tapping down on the slip bowl.
13. ☐ Engage slip segments by hammering down on top of the segments with a soft bar. It is important that the slips be engaged evenly around the casing.
14. ☐ Pull tension on the casing to the desired hanging weight and slowly slacken off tension to load the casing weight onto the Hanger.
    Note: *Weight suspended on the hanger is the weight with which the weight indicator* ***registers as a sharp decrease.*** *If the desired weight has not been achieved, lift the casing load and repeat the procedure.*
15. ☐ Rough cut the casing approximately 12" above the Multibowl's top flange.
16. ☐ Final cut the casing level with the top flange and bevel cut the stub to specifications. ***Note:*** *Ensure the stub is properly beveled without any rough edges that could damage the Packoff's seals.*
17. ☐ Verify the mating ring grooves of the Upper Multibowl and BOP riser flange are clean and in good condition.
18. ☐ Install new BX-160 ring gasket onto Multibowl's ring groove.
19. ☐ Nipple up the BOP stack.
    Note: *Recommended make-up torque for 1-5/8" diameter stud is* 2119 ft.-lbs. with copper thread compound.
20. ☐ Proceed to install the 7" Packoff Support Bushing.
    Refer to page 27 for detailed instructions. ***Note:*** *(Optional) Packoff Bushing can be manually installed without running thru BOP Stack after Step 16 (casing cutting).*

EMERGENCY EQUIPMENT

DWG-20

7" Emergency
Casing Hanger

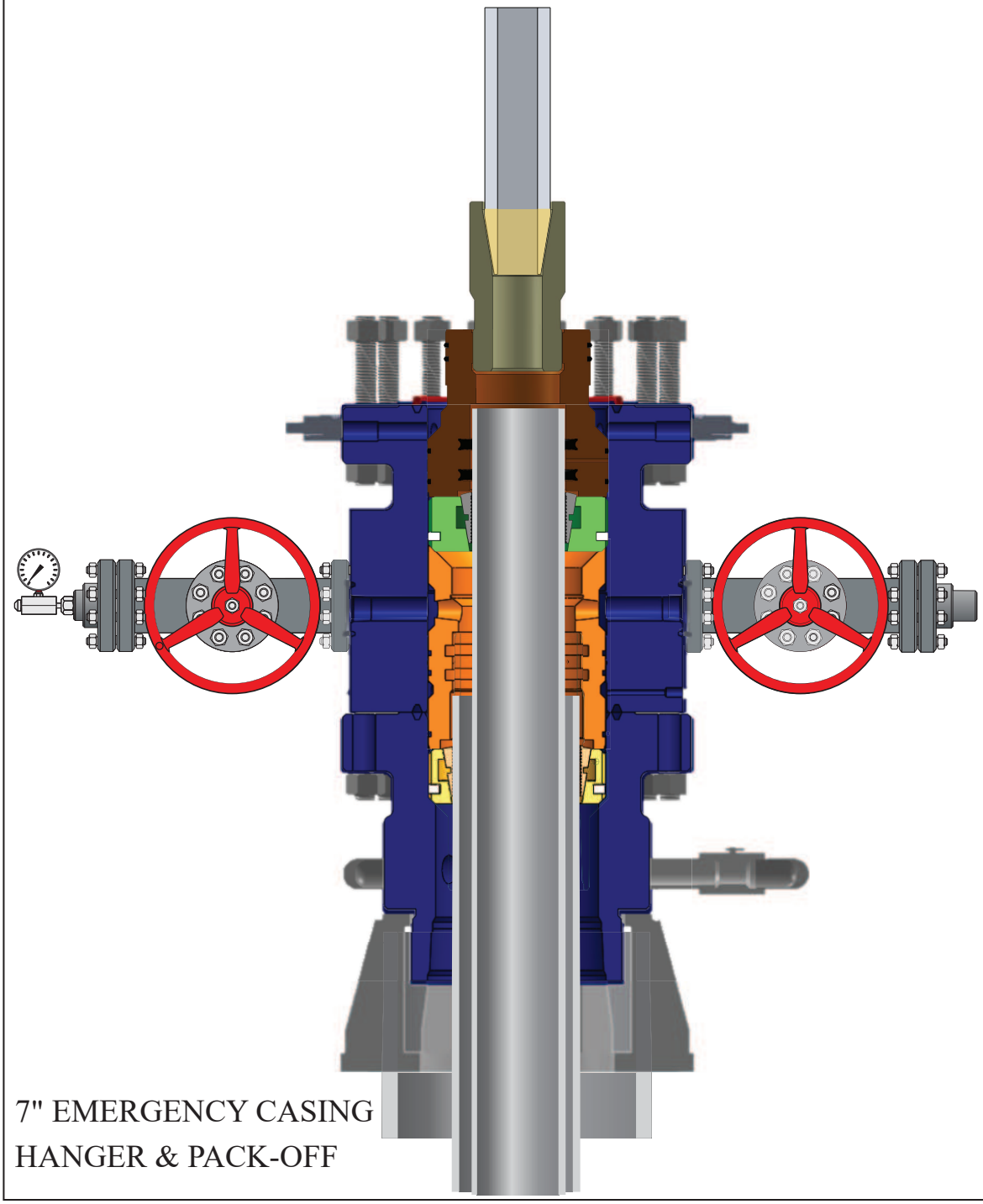

7" EMERGENCY CASING
HANGER & PACK-OFF